Popular Electronics®
NOVEMBER, 1975

EXCLUSIVE!

The First Motorola/AMI '6800' MPU Computer Project

PE TESTED

Features compact size, simplified construction, built-in TTY interface, and low cost.

BY H. EDWARD ROBERTS & PAUL VAN BAALEN

LARGE-SCALE integration (LSI) has provided many useful IC chips for the hobbyist. One of the latest LSI devices is the microprocessor unit (MPU), which has made it possible to build microcomputers that are fairly easy to assemble at moderate cost. The most popular MPU's are the 8008 and 8080 due to their reasonable cost and wide availability in computer kits.

However, many knowledgeable hobbyists have been looking for a microcomputer built around one of a number of other MPU's available (just as some people would like to try a diesel or steam engine to replace the gasoline motor). Most of these readers have told us they were interested in the Motorola M6800 MPU (for one reason or another). Many also felt that the price of a microcomputer was still too high. POPULAR ELECTRONICS is therefore pleased to introduce the first microcomputer using the 6800 MPU in a design that substantially reduces cost.

THE Altair 680 is a complete microcomputer built around the 6800 MPU available from Motorola and American Micro-Systems, Inc. Measuring a very compact 11 1/16"W × 11 1/16"D × 4 11/16"H (28.1 × 28.1 × 11.9 cm), the 680 is less than one-third the size of the Altair 8800. Although both computers have MPU's with the same memory capacity, the 680's smaller enclosure makes internal expandability significantly less. However, it is more than adequate for most applications. More importantly, the 680 costs less than half the price of the 8800 when the two machines are configured similarly in a minimum system

Other attributes of the new computer include ease of assembly (only one large pc board), built-in TTY interface, and high speed (4-μs minimum cycle time). The last is some 10 to 50 times faster than earlier small computers built around the 8008 MPU but half the speed of the 8800.

Another meaningful consideration in a 6800-MPU computer design is the raft of instructional material readily available from Motorola Semiconductor Products, Inc., including the "M6800 Microprocessor Programming Manual." Too, the 6800 is TTL compatible and uses just one 5-volt power supply.

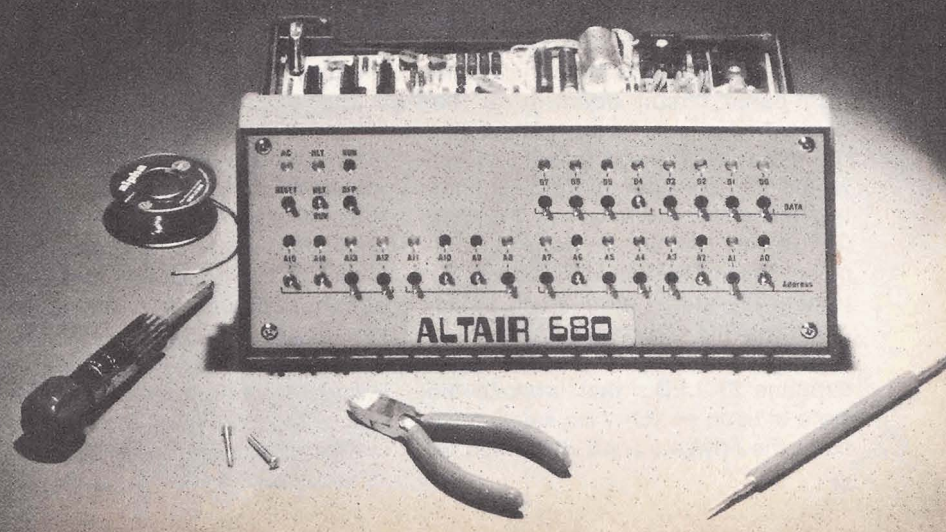

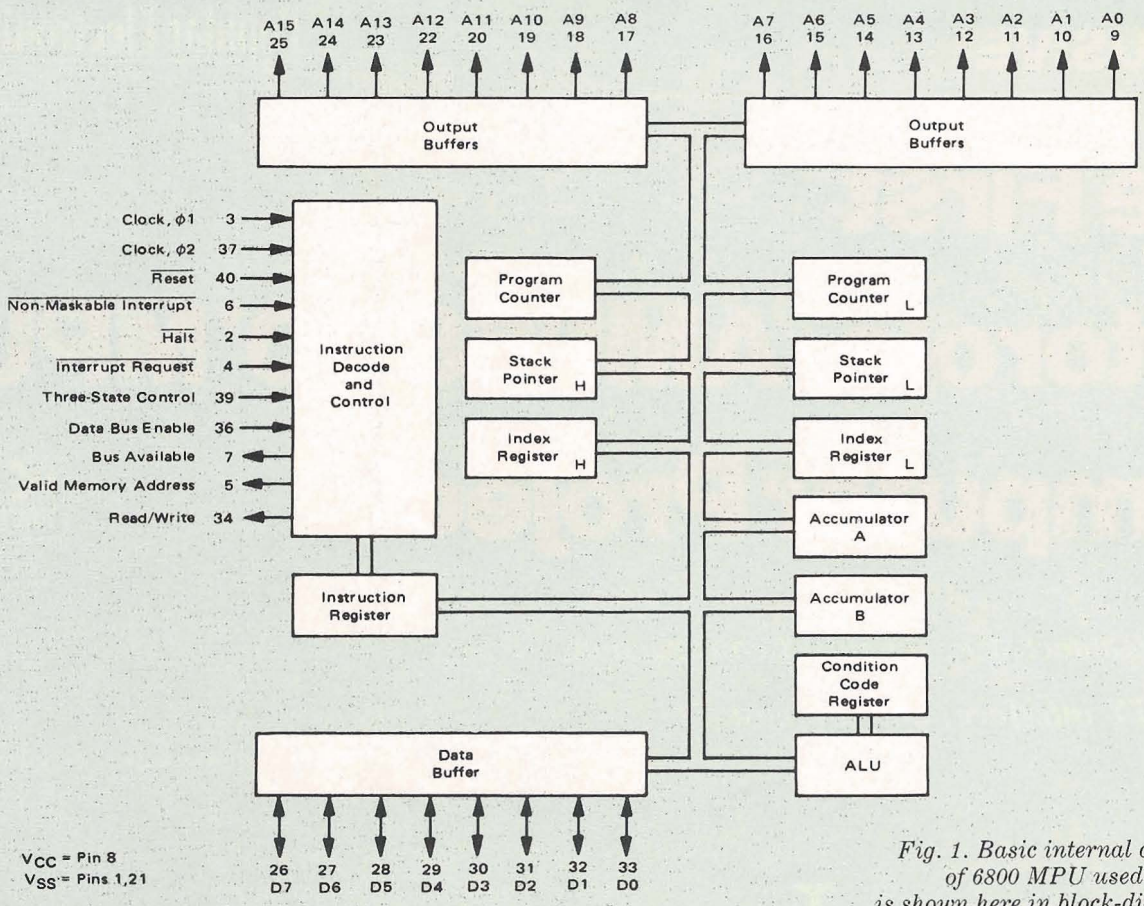

Fig. 1. Basic internal arrangement of 6800 MPU used in computer is shown here in block-diagram form.

Basic System Philosophy. The basic MPU, memory, I/O (input/output), and power-supply circuits in the Altair 680 are located on a single printed circuit board. The addition of a compact power transformer makes this assembly a complete computer system. (Front-panel switch programming can be used, but in the absence of this assembly, PROM's or ROM's must be installed for programming.)

The front-panel assembly contains all the logic needed to reset, halt, or start the processor. Also, any memory cell can be read or written into from the front panel via 16 ADDRESS and eight DATA switches. Mounted on the front-panel circuit board is a 100-contact edge connector that permits the main MPU board to plug directly into the front panel, thus eliminating the need for a wiring harness. (In systems that do not use the front-panel assembly, the MPU board automatically starts running at an address specified by either a PROM or a hard-wired patch.) The front panel contains 27 LED's that indicate the state of each switch. As a safety measure, the POWER switch is located on the back of the cabinet to obviate the possibility of its being accidentally operated during programming.

The basic computer contains 1024 bytes of memory and has provisions for an additional 1024 bytes of PROM or ROM memory. An I/O channel and interface are also included in the basic system. The I/O channel can be configured to interface RS-232 or a 20-mA or 60-mA TTY loop. This means that anyone who can obtain an old five-level Baudot-type Teletype—such as the MOD-15, MOD-19, etc.—can use it as a computer terminal. (Many such Teletypes are available for less than $100 and frequently for as little as $25 nationwide.)

The Altair 680 can be built with either a full-programmability or a "turn-key" front panel. The latter eliminates all controls except restarting the processor. There are a number of applications where this is desirable to eliminate the possibility of having an operator affect the contents of the memory or the computing cycle. An example might be in a sophisticated intruder-detection system where the only control provided for the operator is essentially on/off.

Software. The software associated with the 6800 MPU includes an editor, PROM monitor, and assembler, as contrasted to the editor, assembler, monitor and basic for the Altair 8800 computer.

System Details. The Altair 680 computer is composed of five sections: MPU and clock, memory, control and indication, I/O port, and power supply.

MPU and Clock. As mentioned earlier, the MPU and clock are the new 6800 LSI chip. Its basic internal arrangement is shown in Fig. 1. The main elements are instruction decode and control, instruction register, data and address registers and buffers, 16-bit index register, 16-bit program counter, 16-bit stack pointer, two 8-bit accumulators, condition code register, and ALU (arithmetic logic unit).

The timing and control inputs and outputs for the 6800 chip are:

Phase 1 and phase 2 clock ($\varphi 1, \varphi 2$)—a nonoverlapping 500-kHz clock at V_{cc}.

Address bus A0 through A15—16 high active outputs that determine address or I/O sections to use.

DISPLAY PARTS LIST

C1,C4—0.33-μF, 12-V disc ceramic capacitor
C2,C3—0.47-μF, 12-V disc ceramic capacitor
DA00 to DA15, DD00 to DD07, and DS1 to DS3—RL21 light-emitting diode
ICA,ICB,ICC,ICD,ICI—74LS05
ICE,ICF,ICG,ICH—4449
ICJ—74L00
ICK,ICL—26L123
Following resistors are ½-watt, 5%:
R1 to R16,R20 to R27—1500 ohms
R17 to R19—20,000 ohms
R28 to R30,R33 to R37—4700 ohms
R31 to R38—1000 ohms
R39,R40—10,000 ohms
SC1 to SC12—0.1-μF, 12-V disc ceramic capacitor
SA00 to SA15,SD00 to SD07,S24—Spdt toggle switch
S26,S27—Spdt momentary toggle switch
Misc.—100-contact edge connector

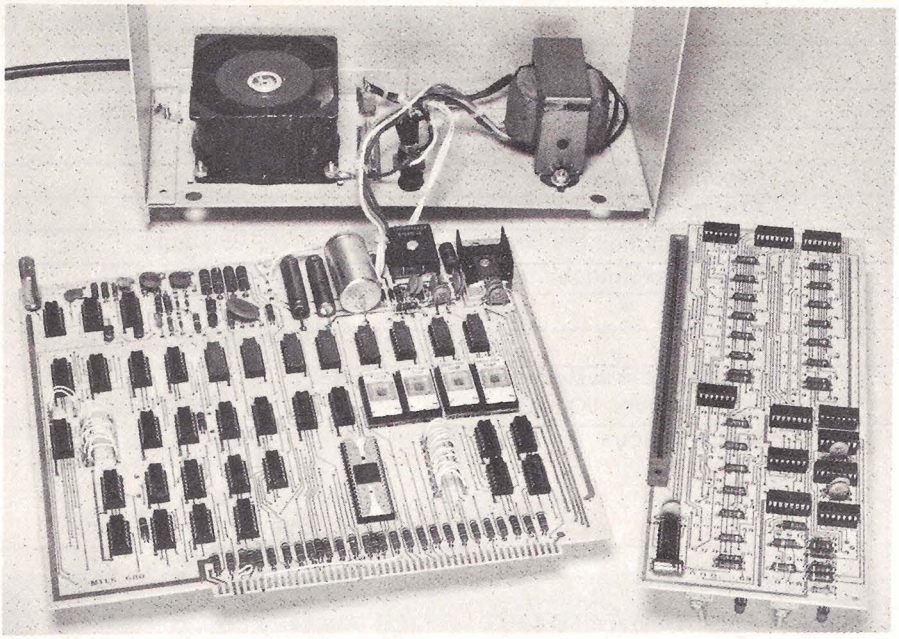

Almost entire computer is assembled on a single large pc board (left). Board at right is for front panel. Boards plug together.

Data bus D0 through D7—eight high active bidirectional lines for transfer to and from memory and peripherals.

Halt signal ($\overline{HLT}$)—low active input that ceases activity in the computer.

Read/write signal (R/$\overline{W}$)—in the high state, signals the memory and peripherals that the MPU is in the read condition; in the low state, signals that the MPU is in the write condition.

Valid memory address (VMA)—signals external devices (memory and I/O) that the MPU has a valid address on the memory bus.

Data bus enable (DBE)—enables the bus drivers.

Bus available (BA)—indicates machine has stopped and address bus is available.

Reset ($\overline{RES}$)—resets and starts the MPU from a power-off condition. A positive-going edge on this input tells the MPU to begin the restart sequence.

Interrupt request ($\overline{IRQ}$)—when low, tells the MPU to start an interrupt sequence (save the registers on the stack, set interrupt mask bit high so no other interrupts can occur, and vector to the interrupt address). This type of interrupt can only occur if the interrupt mask bit in the condition code register is low.

Nonmaskable interrupt ($\overline{NMI}$)—essentially the same as the $\overline{IRQ}$, except it is not dependent on the condition code register.

The clock is a 2-MHz crystal-controlled oscillator that uses a pair of inverters that drive flip-flops to form a 500-kHz, two-phase clock that is distributed to the MPU, memory, and I/O sections in the computer via inverters and buffers.

Memory. The memory system consists of 1024 words of 8-bit-wide RAM, using 2102-type 1024 × 1-bit devices, and up to 1024 words of PROM, using ultraviolet-erasable 1702 devices. The basic arrangement is shown in Fig. 2. The low-order address bits are fed to both the RAM's and PROM's.

Front Panel. The front panel assembly contains the RUN/HALT switch, with a LED for each switch position; a reset switch with no LED indicator; and the ac power ON LED indicator (Fig. 3). The 16 ADDRESS switches and eight DATA switches each have their own LED indicator.

The DEPOSIT, RESET, DATA, and ADDRESS switches are enabled only when the RUN/HALT switch is in the HALT position, at which time, a retriggerable one-shot multivibrator drives the halt input of the MPU low. This, in turn, drives the bus-available (BA) signal high and also conditions the other switches. To view the data in any memory location, the RUN/HALT switch must be placed in the HALT position and the ADDRESS switches set to the required address. The data at that

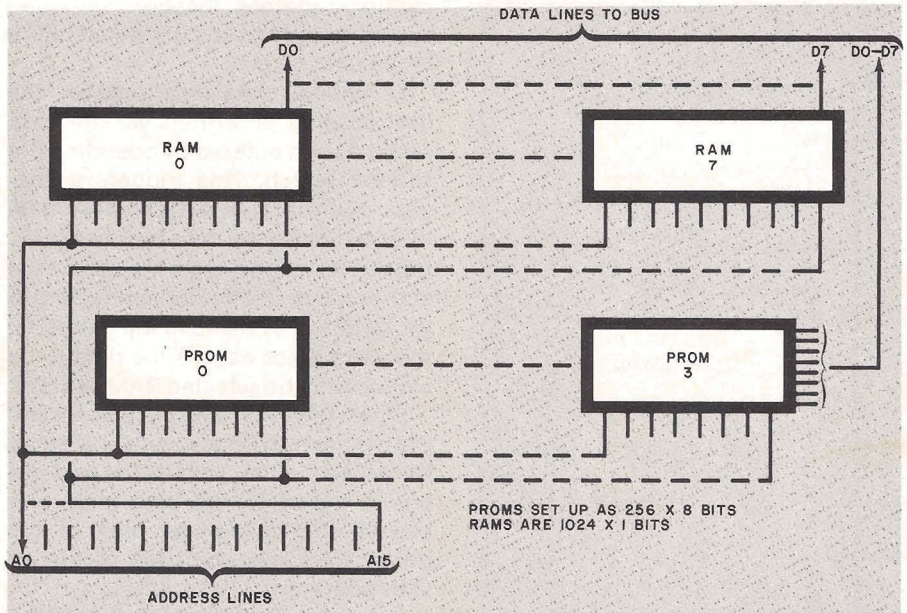

Fig. 2. There are eight RAM's (RAM 0 through RAM 7) and four PROM's (PROM 0 through PROM 3) in the computer's memory system.

ALTAIR COMPUTER COMPARISON CHART

Features	Altair 680	Altair 8800
Maximum word size	24 bits (byte oriented)	24 bits (byte oriented)
Arithmetic unit	8-bit parallel	8-bit parallel
Minimum cycle time	4 μs	2 μs
Program instructions	72	78
Maximum memory size	65k bytes	65k bytes
Internal expandability	5 interface cards	250 interface cards
Interrupt	3 levels	8 levels
MPU	6800 (Motorola, AMI)	8080 (Intel, TI)
Approximate system cost (lk memory, I/O, case, P/S)	$300	$600
Miscellaneous	Fewer parts 2 printed circuit boards Smaller size Built-in TTY interface	Minimum of 4 pc boards

MAIN BOARD PARTS LIST

BD1—Bridge rectifier (VJ048)
C1—3300-μF, 50-V electrolytic capacitor
C2,C3—100-μF, 50-V electrolytic capacitor
C4 to C9—0.33-μF, 50-V disc ceramic capacitor
C10,C13—0.1-μF, 16-V disc capacitor
C11,C12—0.33-μF, 16-V disc capacitor
C14—0.01-μF, 16-V disc capacitor
C15—1-μF, 50-V electrolytic capacitor
D1,D2,D7 to D12—1N4004 diode
D3 to D6—1N4739A, 9.1-V zener diode
F1—1-A, 250-V ac, 3-AG fuse
ICA—7404
ICB—7473
ICC,ICUU—7408
ICD,ICE,ICS—4449
ICF,ICG—74LS01
ICH,ICJ,ICK,ICL,ICM,ICN,ICP, ICR—2102
ICT,ICU,ICGG,ICHH,ICPP, ICRR—74L30
ICV—74L00
ICW—74L74
ICX,ICY,ICTT—4050
ICZ,ICAA,ICBB,ICCC—1702
ICDD,ICFF—74L04
ICEE,ICMM—74L10
ICJJ—6800
ICKK,ICLL,ICSS—74LS05
ICNN—74LS27
Q1,Q3,Q4—TIS98
Q2—EN3907
Except where noted, following resistors are ½-watt, 5%:
R1,R2—33 ohms, 2-watt, 5%
R3,R4,R5,R7—100 ohms
R6—130 ohms, 1-watt, 5%
R8,R11—800 ohms
R9—220 ohms, 1-watt, 5%
R10,R28 to R51—7500 ohms
R12,R15,R16,R17—1000 ohms
R13—470 ohms
R14,R20,R21—390 ohms
R18,R19—330 ohms
R22—33,000 ohms
R23,R24,R25,R60—10,000 ohms
R26,R27,R56,R57,R58,R59—not used
R52 to R55—3000 ohms
SP1—Spdt toggle switch
T1—5-volt, 1.2-A transformer
VR1—7805 regulator
XTAL—2-MHz crystal
Misc.—Fuse holder (Buss HKP-CC, line cord, fan (IMC 3⅜"), I/O socket (DB-255), sockets (14-pin, 22; 16-pin, 20; 24-pin, 4; 40-pin, 1), case optional).
Note—The following are available from MITS, 6328 Linn, N.E., Albuquerque, NM 87108: complete kit (all parts) #680F at $293; complete kit except for front panel board #680T at $240; kit #680MPU, including pc board, 6800 MPU, lk memory, and all main board components except power supply at $180; front panel and MPU pc boards #680PC at $48; I/O socket kit at $29; fan kit at $16; 256 x 8-bit PROM kit at $42; construction information package is free, with self-addressed stamped 9" x 12" envelope.

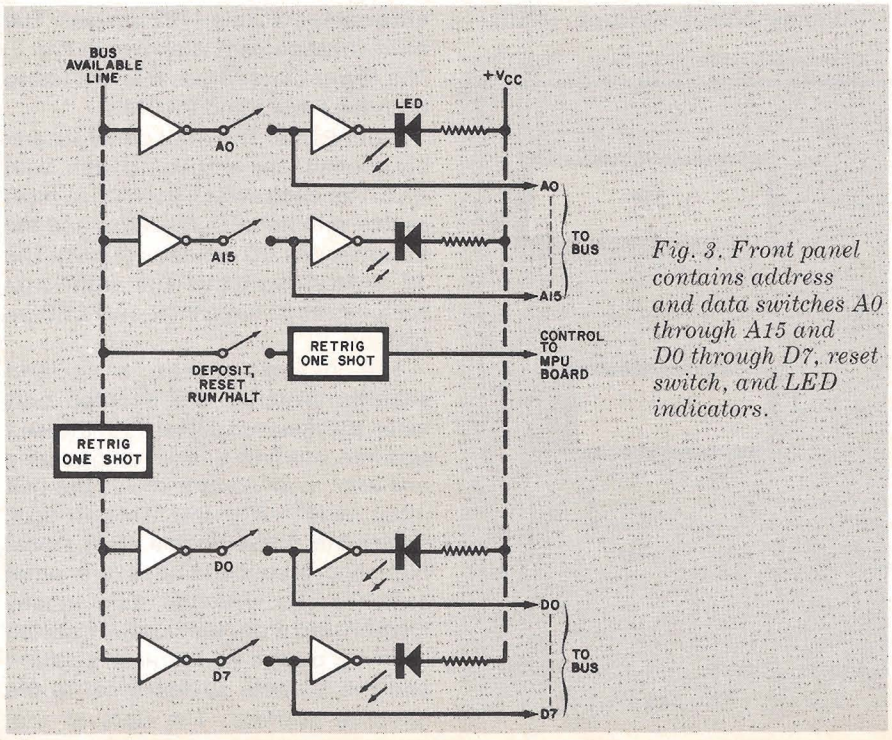

Fig. 3. Front panel contains address and data switches A0 through A15 and D0 through D7, reset switch, and LED indicators.

memory address location will then appear as lighted and unlighted LED's in the DATA display.

To change data in a location, the desired data is written via the DATA switches and entered by operating the DEPOSIT switch. This triggers a one-shot multivibrator, enabling the data information to the data bus and causing the R/$\overline{W}$ signal to go low. Since the address bus is already connected to the switches by being in the halt state, the write pulse causes the data to be written into the selected RAM address.

When the RESET switch is operated, the CPU resets. This, in turn, initiates a restart sequence. That is, the address bus is pulled to the high state and causes the hard-wired data in the board jumpers to be used as the restart address.

Access to the I/O port is gained by addressing location 17577 (in octal). A sequence of events then occurs that

causes an output to the built-in TTY output jack and at the Teletype itself.

Power Supply. The main 5-volt line is generated within the computer by a conventional bridge rectifier, filter capacitor, and IC regulator circuit. A 32-volt winding on the transformer is used to generate the unregulated ±16 volts required for the TTY interface system, while a −16-volt line is fed to four zener-diode-regulated outputs to provide four 9-volt lines for the PROM's.

Construction. The actual-size etching and drilling guides for the computer boards are larger than our page size. Rather than reducing or cutting them up to fit our pages, a free construction package is available. If you wish to obtain a construction information package, simply send a self-addressed stamped 9″ × 12″ envelope to the address given at the end of the Parts List.

The construction package contains full-size schematics, full-size etching and drilling guides, component-placement diagrams, and front-panel layout. ◈

CRAMER ELECTRONICS ENTERS OEM COMPUTER KIT MARKET

THE major reason for the tremendous success of the various computer kits on the market is that they save considerable time. One doesn't have to hunt down the MPU's, memories, etc., that must be accumulated before embarking on a home computer project. It appears that OEM engineers are also spending considerable time in hunting down computer parts. Cramer Electronics, one of the leading U.S. electronic parts distributors, has decided to enter the computer kit business, with emphasis on the OEM market.

Cramer is starting with three kits, separately based on the Intel 8080, Motorola 6800, and Texas Instruments TMS8080 MPU's. Each of the kits shares a common $495 price tag.

You get a lot for $495: complete color-coded schematic diagram; RAM with 1024 (8-bit) bytes, expandable to 65 k bytes; erasable PROM with 1024 (8-bit) bytes; support circuitry, including clock, complete buffering, control and synchronization logic, interrupts, DMA controls; etc. The PROM gives you a program to run at the outset. There are at least four 8-bit-wide input and output ports, with expandability to 512 ports, decoding for 16 of which is included.

The PROM contains a system monitor to permit the computer to be used as soon as it is assembled. Programs can be entered, modified, examined, and executed under switch control or by typed-in commands. A cassette program, included with the kit, can be used to debug the computer. Finally, a complete user manual gives hints on programming and how to expand the computer.

All together, there are about 190 parts in each kit, adding up to a total catalog value of some $700. Software is included in the kits to help in programming via front-panel switches and LED's, cassette tape, Teletypewriter, or any RS-232-compatible terminal. Not supplied are printed circuit boards, power supply, and cabinet.

For more information about the new computer kits, write to: Cramer Electronics, Inc., 65 Wells Ave., Newton, MA 02159. ◈